DRAWING REVISION INFORMATION					
ZONE	REV.	CHANGE No.	DESCRIPTION	DATE	APPROVED
	1	N/A	INITIAL RELEASE	23-02-17	

CARBON 20

CARBON-20

0.25 LUX LINE @ 2950M
0.50 LUX LINE @ 2086M
1.00 LUX LINE @ 1475M
3.00 LUX LINE @ 851M
MEASURED DATA

CARBON-20
15 DEGREE REEDED LENSES

CARBON-20
15 DEGREE REEDED LENSES OUTBOARD, VARIABLE REEDED LENS CENTRE

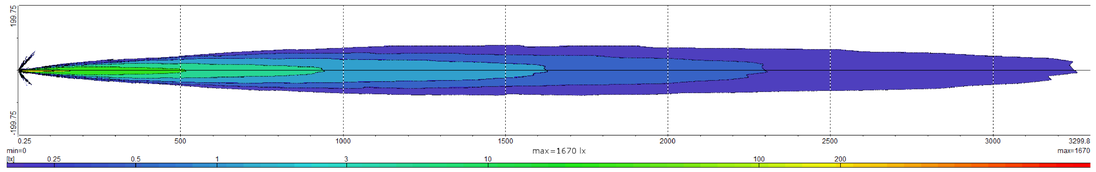

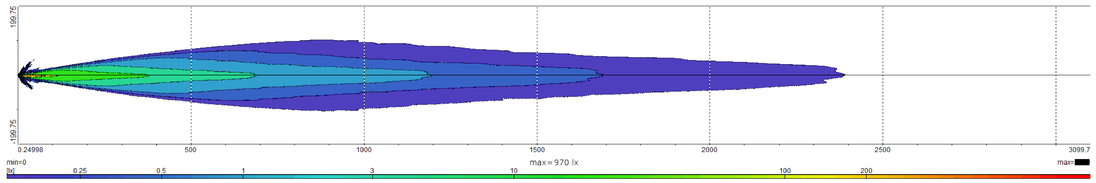

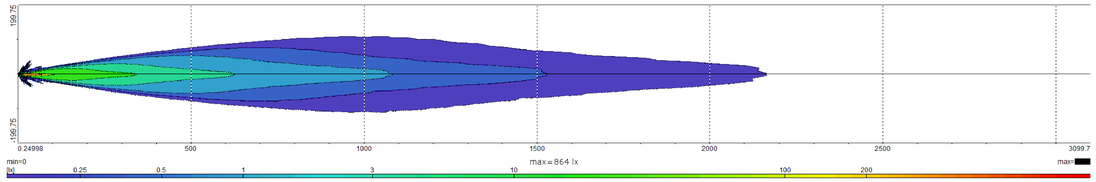

LAZER LAMPS CARBON-20 SERIES

MATERIALS
- CARBON FIBRE HOUSING
- HARDCOATED PC LENS WITH INTERNAL PRINTED BLACKOUT
- ALUMINIUM HEATSINK

WEIGHT
- CARBON 20 LIGHT ASY = 1.375KG

PHOTOMETRIC PERFORMANCE
- 22550 LUMENS
- LED LIFE 50K HRS
- OPTICAL EFFICIENCY 96%
- HIGH INTENSITY LED'S

POWER CONSUMPTION/INFORMATION
- 220W

ELECTRICAL CONNECTOR
- SUPPLIED STANDARD WITH BINDER CONNECTOR
- CUSTOM CONNECTOR OPTIONS CAN BE ENGINEERED AT REQUEST

VOLTAGE REQUIREMENTS
- VOLTAGE RANGE 9-32V

THERMAL CONTROL
- DYNAMIC DRIVE CURRENT MODULATION TO OPTIMISE LIGHT OUTPUT CONSIDERING ENVIRONMENTAL CONDITIONS

PACKAGING REQUIREMENTS
- 2MM AIR GAP ALL ROUND
- THROUGH AIR FLOW REQUIRED (2M/S MIN RECOMMENDED)

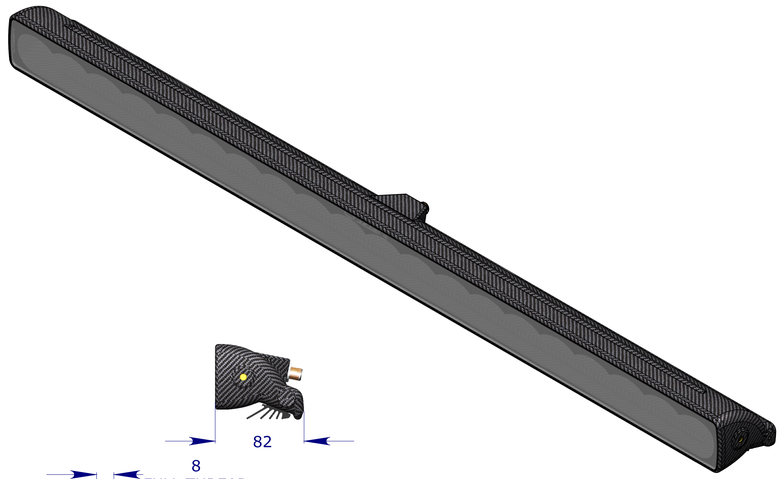

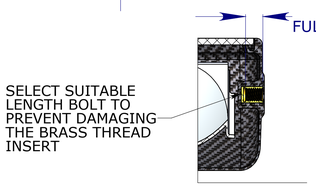

SECTION A-A
SCALE 1 : 1

PRODUCT GROUP:	CARBON SERIES	LAZER 2 PAGES OLD MILL, TAMWORTH RD, HERTFORD, SG13 7DG TEL: 01992 677071 WWW.LAZERLAMPS.COM		NAME	DATE	PROJECT: CARBON SERIES
PROCESS:			DRAWN BY	G. BAILEY	23-02-17	DESCRIPTION: CARBON-20
UNLESS STATED OTHERWISE ALL TOLERANCES TO BE:	PROPRIETARY & CONFIDENTIAL		CHECKED BY	G. BAILEY	23-02-17	
ANGLES X.X = ±1.0° X.XX = ± 0.5° X.XXX± 0.1°	THE INFORMATION CONTAINED IN THIS DRAWING IS THE SOLE PROPERTY OF LAZER LAMPS LTD. ANY REPRODUCTION IN PART OR AS A WHOLE WITHOUT THE WRITTEN PERMISSION OF LAZER LAMPS LTD IS PROHIBITED		APPROVED BY	G. BAILEY	23-02-17	
DECIMALS X.X = ±0.4 X.XX = ± 0.2 X.XXX± 0.05			WEIGHT (g):			DRAWING NO. REV 1
BREAK ALL SHARP INTERNAL AND EXTERNAL EDGES 0.2 RAD OR CHAMFER	UNLESS STATED OTHERWISE ALL DIMENSIONS IN MM. ALL WEIGHTS IN GRAMMS DO NOT SCALE THIS DRAWING		THIRD ANGLE PROJECTION	MATERIAL:	FINISH:	SCALE 1:2 / SHEET 1 OF 1 / SHEET SIZE A0